Aussie
GMP

OPERATION & INSTALLATION MANUAL

PRIMED FOR ACTION

Aussie GMP Electric Motor Pumps

Revision: #3 (April 2024)

3 GMP year warranty

Read this manual carefully before installing and operating this pump

Aussie Pumps

AUSSIE GMP INSTALLATION & OPERATING INSTRUCTIONS

CONTENTS

AUSSIE GMP … HEAVY DUTY PUMPS THAT WORK

Aussie GMP electric drive pumps are available in the following configurations:

- **Cast iron body**, cast iron impeller……. semi trash configurations.
- **NiAl bronze body**, NiAl bronze impeller, 316 stainless steel fitted fasteners and plugs, stainless steel mechanical seal, 316 stainless steel shaft.
- **Cast 316 grade stainless** steel wetted parts including body, impeller and suction cover, 316 grade stainless steel drive shaft.
- All versions feature stainless steel shafts.

Please note **semi trash** design includes:

- Silicon carbide mechanical seal for abrasive liquids.
- Easy clean out front mounted ports (located below suction port) for ease of service.
- Stainless steel wear plate.

CONGRATULATIONS ON THE PURCHASE OF YOUR AUSSIE GMP SELF PRIMING ELECTRIC DRIVE PUMP

High and low pressure pumps

Aussie electric drive pumps are available in a wide range of configurations. These include:

- Open impeller design, high flow, medium head
- Open impeller high head, medium flow
- Closed impeller, high pressure

Pumps are designed for high speed application, rated for operation up to 3600 rpm.

Optional Seals

A wide range of optional seals are available for Aussie GMP pumps to suit specific applications. These options include the following:

- Standard ceramic seal and Counterface.
- Ceramic seal stainless steel fitted.
- Viton seal kit.
- Silicon carbide seal kit.
- Tungsten carbide seal kit.

N.B. Combination Viton and tungsten carbide or silicon carbide for abrasive and corrosive liquids are also available on special request.

ATEX RATED MOTOR PUMPS …
FOR SAFE TRANSFER OF DIESEL FUEL

Manufactured under
EU directive 2014/34/EU

Refer to motor manufacturers specific installation information enclosed with this manual.

PREPARATION FOR OPERATION

INSPECTION

Inspect unit for shipping damage immediately on receipt. If any visible damage exists note damage on shipping docket before signing. Notify your Distributor immediately of any damage to the shipment.

BASIC SUITABILITY CHECKS

Read these instructions carefully and satisfy yourself that you are comfortable with the operation and set up of the machine. Please note the following:

- **Aussie GMP** cast iron standard configuration pumps are suitable for pumping clean water and fluids that are chemically and mechanically non aggressive. (N.B some pumps can be expressly configured for corrosive applications. Check published data.)
- Fluids should be free of explosive substances with a maximum temperature of 70°C.
- Motor pump should be installed in a **well ventilated** place, protected from unfavourable weather conditions and with environmental temperatures not exceeding 40°C.
- Note pump is provided with mounting feet or on a base plate. For safety reasons please fix the pump down using the holes. Install the pump in a horizontal, level position on a firm foundation.

Note maximum suction depth for GMP pumps is 6 metres.

PIPEWORK RECOMMENDATIONS

Pipes must be fastened and anchored to their supports and connected in such a way that they do not transmit force, stress or vibration to the pump.

The internal diameter of the pipe depends not only on their length but also on the flow rate to be produced. In no case must the pipe diameter be smaller than the diameter of the pump inlet or outlet.

Before installation check that all pipes are clean on the inside.

AVOID DRY RUNNING … seals may be damaged and result in a leak. This is not covered by warranty.

SUCTION HOSE OR PIPEWORK

Keep suction as short as possible with absolute minimum numbers of bends or connections. If bends are required, use a long radius curves to reduce internal turbulence and therefore friction loss.

Check for air leaks. Air leaks will prevent the pump priming correctly and substantially reduce pump performance. Suction hose or pipe work must slope upwards towards the pump so as to prevent formation of air pockets that could prevent priming or cause the pump to lose its prime. N.B. ingress of air to pump chamber will cause loss of prime and cavitation. This can lead to major pump failure.

Foot valves are not necessary with self priming pumps. We recommend the use of a good quality suction strainer to protect the pump from ingress of solids.

SUBMERGENCE

For best result ensure suction hose is immersed in water at least 3 times the depth of the diameter of the hose. **For operating below normal head fit a gate valve.**

DELIVERY PIPE

It is recommended to fit a regulating valve down stream from the pump. The regulating valve is used to control the flow rate/head to ensure the pump is working within its performance curve. Fit a pressure gauge on the delivery pipe.

Do not operate pump against a closed discharge valve as pump liquid could overheat and seals may be damaged.

ELECTRICAL CONNECTION

The electrical installation must be carried out by a suitably qualified technician.

Power must be switched off before installation or maintenance work is carried out.

Check the motor's electrical tag and ensure power supply matches those required. For terminal connections refer to wiring diagram supplied with the pump.

DANGER—RISK OF ELECTRIC SHOCK

This pump must be earthed.

A suitably sized circuit breaker must be installed.

WIRING GUIDELINES

The electrical connection must always be carried out by skilled technician complying with the local regulations in force.

Select suitable sizes for the electric power cable based on the length and the current indicated on the data plate on the pump.

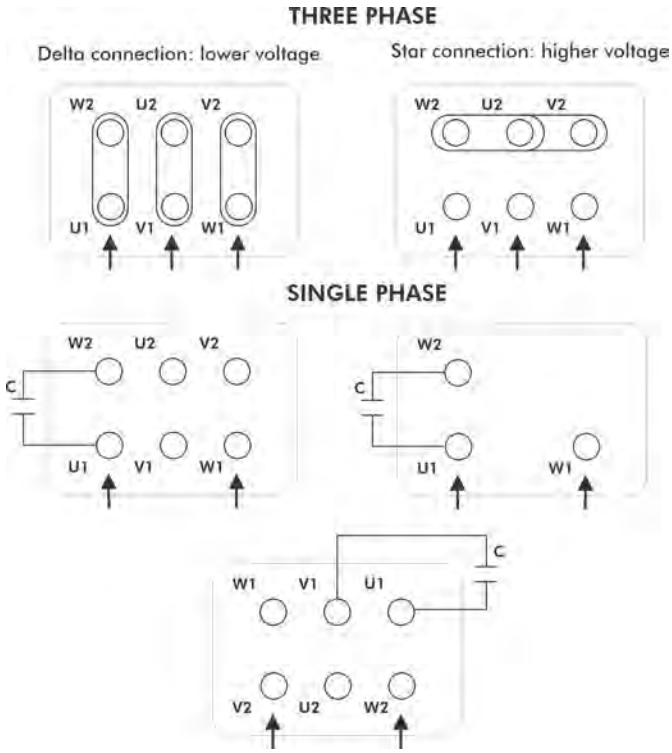

Prepare the ends of the power and earth leads in such a way that during connection the leads cannot escape when they are being blocked with the nuts on the terminal board and the earth screw.

Connect the terminals according to the indications on the diagram inside the cover of the terminal board.

Connect electric pump to earth using the terminal provided. Ensure that the power network has an efficient earth system and that the earthing of the electric pump is effective.

On some single phase models the motor is protected by a thermal device with automatic cut-out and reset.

Always switch off electric power before carrying out maintenance and repairs on that pump.

Suitable electric protection must be fitted (magneto thermal switch and differential switch) which can ensure omni-polar disconnection from the mains with the distance of at least 3mm between the contacts on opening. The maximum allowed tolerance between the actual electric supply voltage and the rated value shown on the data plate of the pump is ±5%.

If the above rules are not carefully observed, warranty on the electric motor will be void.

PUMP OPERATION

STARTING THE PUMP

Before starting the pump ensure the motor is free to turn.

DO NOT START THE PUMP IF THERE IS NO WATER IN THE PUMP BODY.

1. Fill pump with water via the priming plug on top of the pump, making sure that air is not trapped in the pump or pipe work.
2. Open gate valve on delivery line if fitted.
3. Start pump. Priming time varies up to 6 minutes according the suction height and speed of the pump.

Never attempt to operate pump without priming first. Extended dry operation will destroy pump seal. If unit has been operated dry, stop immediately, allow the pump to cool before adding priming water.

Warning: Never run the pump dry.

Check the motor shaft is turning in the same direction as indicated on the by the arrow on the pump body.

Check the pump is working within its rated performance range as indicated on the data plate. If not, adjust the regulating valve.

MAINTENANCE & STORAGE

1. Drain pump if it is not going to be used for any period of time, especially if there is a chance of the pump being exposed to freezing temperatures.
2. Check filter regularly to ensure it does not become blocked.
3. Check pump and pipe work for leaks regularly and fix any leaks immediately.
4. Refer to troubleshooting guide for further assistance if required.

LONG TERM STORAGE

Pump should be both stored in a warm and dust-free environment with a relative humidity of 40 to 60%.

Under other conditions further protection is required. Contact Aussie Pumps for Long Term Storage Instruction sheet.

MECHANICAL SEAL & COUNTERFACE OPTIONS

Check size of seal or counterface required on spare parts breakdown and refer to the tables below for options available.

MECHANICAL SEAL						
Carbon Graphite/ NBR	Carbon Graphite/ NBR/ AISI 316	Carbon Graphite/ Viton	Silicon Carbide/ NBR	Silicon Carbide/ Viton	Tungsten	Size
6332		5110	8429	8049	6333	15.32.13
6334	H395	7710	6781	F660	6336	16.32.13
6337	H396	5264	9075	F632	6338	19.39.13
6339	H397	5217	8404	F634	6340	25.47.14
6341	H398	5265	F976	L260	6342	32.54.15

COUNTERFACES				
Silicon Carbide/ NBR (OR VITON)	Alumina/ Viton	Alumina/ NBR	Tungsten /NBR	Size
	7709	6346	5218	17.5,36.5,9.5
	9812	7702	F661	17.5.36.8
		6344		17-38-8
	5111	6344	5108	18.38.8
H826/NBR	F633	6349	6350	21.42.8
		8436		26.57.7
H614/VITON	6588	6353	5214	27.50.10
	5209	6359	5463	27.52.10
		6355		33-57-10
H828/NBR	5266		5447	34-57-10

REJUVENATION KITS

Aussie make servicing your GMP pump simple.

Order a complete rejuvenation kit and get all the seals, gaskets and counterface required during a standard service. You even get a complete check valve.

Simply state the CAT number of your pump, and we'll match it to the right rejuvenation kit.

SPECIFICATIONS

Kit includes mech seal, counterface, complete check valve, gaskets for filling cap & trash port.

Cast Iron Electric drive semi trash pumps

Port size (in/out)	Model	CAT no.	Supersedes	Rejuvenation kit		Motor	kW	IP rating	Total Head (m)	Max Capacity (l/m)	Solid size (mm)
1½x1½	**B1.5KQ-A/ST**	EBET*	EA6E	R805		1ϕ, 240v	**0.75**	54	15	270	11
		EBEU*	EA6F	R805		3ϕ, 415v		55			
2" x 2"	**B2KQ-A/ST**	EB93		R516	(R684 Viton)	1ϕ, 240v	**2.2**	54	18	440	19
		EBGI*	EB78	EB78 ... R516 EBGI ... R810	(R684 Viton) (R795 Viton)	3ϕ, 415v		55			
3" x 3"	**B3KQ-A/ST**	EAR5	EA3M	R527	(R796 Viton)	1ϕ, 240v	**2.2**	54	16	900	27
		EBEJ*	EAR6	EAR6 ... R517 EBEJ ...	(R796 Viton) (R797 Viton)	3ϕ, 415v		55			
	B3XR-A/ST	EAFV	EAS1	R518	(R763 Viton)	3ϕ, 415v	**4**	55	26	1,300	19
		EANH	EAS3				**5.5**		26	1,400	24
		EANL	EAS5				**7.5**		31	1,500	24
4" x 4"	**B4KQ-A/ST**	EAGF	EAR8	R519	(R798 Viton)	3ϕ, 415v	**4**	55	14	1,600	37
	B4XR-A/ST	EADL		R665	(R799 Viton)	3ϕ, 415v	**11**	55	30	2,200	35
		EANM	EAS7				**15**		29	2,300	39
6" x 6"	**B6XR-A**	EAVM		R703		3ϕ, 415v, 4 pole	**11**	55	14	4,000	50
		EBFX					**15**				
8" x 8"	**B8XR-A**	EB00				3ϕ, 415v, 4 pole	**30**	55	16	7,500	70
		EB01					**37**	55	20	8,300	70

SPECIFICATIONS CONTINUED

Cast Iron High Head transfer/semi trash pumps

Port size (in/out)	Model	CAT no.	Supersedes	Rejuvenation kit	Motor	kW	IP rating	Total Head (m)	Max Capacity (l/m)	Solid size (mm)
2” x 2”	**G2TMK-A**	EAEL	EA3S	R811	1ϕ, 240v	2.2	54	33.5	375	5
		EBHN*	EADT	EADT … R811	3ϕ, 415v		55			
2” x 1½”	**B1½ZPM-A***	EANN	EAL5	EAL5 … R811	3ϕ, 415v	7.5	55	58.5	600	6
3” x 2”	**B2ZPM-A***	EANP		R812	3ϕ, 415v	15	55	70	800	6
NEW 2”& 3” Semi trash high pressure pumps … Silicon carbide mech seal & stainless steel shaft										
2” x 2”	**G2TMK-A/ST**	EA9P		R812	3ϕ, 415v	3	55	34	400	8
3” x 3”	**G3TMK-A/ST**	EANC		R737		4		35	800	8
		EAND				5.5		40	910	10
		EANE				7.5		47	850	13
		EANG		R734 (R759 Viton)		11		54.4	1100	16
	B3ZPM-A/ST	EANR			3ϕ, 415v	15		64	1250	13
		EA9A				18.5		70	1250	14
		EA9B				22		78	1250	19

Kit includes mech seal, counterface, complete check valve, gaskets for filling cap & trash port.

NiAl Bronze & 316 Stainless Steel transfer pumps

Port size (in/out)	Model	Motor	kW	IP rating	Total Head (m)	Max Capacity (l/m)	Solid size (mm)	NiAl Bronze		Cast 316 Stainless Steel	
								CAT	Rej kit	CAT	Rej kit
1”x 1”	**B1KQ-A**	1ϕ, 240v	0.37	54	12	130	6	EA9M	R633	-	
		3ϕ, 415v						EA9N	R633	-	
2” x 2”	**B2KQ-A**	1ϕ, 240v	2.2	54	19	450	16	EB88	R624	EB92	R623
		3ϕ, 415v	2.2					EBGH		EBHF	
3” x 3”	**B3KQ-A**	1ϕ, 240v	2.2	54	16	840	27	EAT1	R683	-	
		3ϕ, 415v						EBFH		-	
	B3XR-A	3ϕ, 415v	4	55	28	1300	19	EAB5	R616	EALP	
		3ϕ, 415v	5.5		28	1400	24	EALC	R616	EALR	R616
		3ϕ, 415v	7.5		30	1500	24	EALD	R616	-	
4” x 4”	**B4KQ-A**	3ϕ, 415v	4	55	15	1650	35	EALE		-	
	B4XR-A	3ϕ, 415v	11	55	26	2010	27	EAFG	R617	EAMB	
		3ϕ, 415v	15		31	2250	39	EAFG	R617	EAAC	
2” x 2”	**G2TMK-A**	1ϕ, 240v	2.2	54	34	400	8	EA9H	R632	-	
		3ϕ, 415v	2.2					EA4R	R632	EB85	
3” x 3”	**G3TMK-A**	3ϕ, 415v	4	55	35	850	8	EAHS	R618	-	
		3ϕ, 415v	4		40	910	10	-	-	EALV	R737
		3ϕ, 415v	7.5		44	900	13	EAHV	R618	EALZ	R737
		3ϕ, 415v	11		52	1030	16	EAFR	R619	EACD	
	B3ZPM-A	3ϕ, 415v	15		65	1200	13	EAFD	R619		
			18.5		70	1200	14	EADV	R619		
			22		76	1200	19	EARV	R619		

TROUBLESHOOTING GUIDE

Symptoms	Cause	Action
Suction failure	Air leak in suction hose or connections	Check and correct hose and couplings
	Pump not properly primed	Prime pump correctly
	Speed too low or head too high	Consult pump specialist
	Blocked suction line	Unblock suction
	Excessive suction lift	Check pump specification
Reduced performance	Air pockets or small air leaks in suction line	Locate and correct
	Obstruction in suction line or impeller	Remove obstruction
	Insufficient submergence of the suction pipe	Consult pump specialist
	Excessively worn impeller or wear ring	Replace impeller and/or wear ring
	Excessive suction lift	Check pump specification
	Wrong direction of motor rotation	Refer to installation instructions
Engine or motor overloaded	Speed higher than planned	Reduce speed
	Liquid specific gravity too high	Consult pump specialist
	Liquid handled of greater viscosity than water	Consult pump specialist
	Too large an impeller diameter	Trim impeller
	Low voltage	Consult power supplier
	Stress in pipe connection to pump	Support piping properly
Excessive noise	Misalignment	Align all rotating parts
	Excessive suction lift	Check pump specification
	Material lodged in impeller	Dislodge obstruction
	Worn bearings	Replace bearings
	Impeller screw loose or broken	Replace
	Cavitation (improper suction design)	Check flow not impeded, i.e. Strainer blacked, gate valve part close etc Check duty point of application matched pump specs
	Wrong direction of rotation	Refer to installation instructions
Premature bearing failure	Misalignment	Align all rotating parts
	Pump not secured	Secure pump using mounting points to a firm foundation
	Suction or discharge pipe not properly supported	Correct supports
	Bent shaft	Replace shaft
	Water or contaminates entering bearings	Protect pump from environment
	Lubrication to bearings not adequate	Check manual
	Wrong type of lubrication	Check manual
Electric motor failure	High or low voltage	Check voltage with voltage metre
	High electric surge	Monitor voltage and consult power supplier
	Pump running at open flow (no head)	Check duty point of application matched pump specs
	Poor electric connection	Turn power off, clean and check connections
	Overloads	Check amperage. Do not exceed nameplate full load amperage
	Bearing failure	Change bearings in motor
	Cooling vent plugged (rodent, leaves, dirt, etc.)	Install proper screens
	Moisture or water in motor	Protect pump from environment

Exploded views and parts lists for all pumps are available to download from the Aussie Pumps website. (aussiepumps.com.au)

AUSSIE GMP WARRANTY

All Aussie GMP pumps are guaranteed to be free of faulty workmanship for a period of 3 years from the date of installation.

- Repairs carried out by Aussie Pumps Service Division on products outside the guarantee period are guaranteed to be free of faulty workmanship or material for a period of three (3) months after the repair.
- Warranty is deemed to apply to failures due to faulty workmanship or materials and does not apply to fair wear and tear, improper installation or application, the users failure to carry out maintenance, or as a result of the product's use for purposes for which it was not designed.
- Aussie Pumps is not liable for any loss of profit or consequential or indirect special loss arising from defects in any of its products. Moreover,
- Aussie Pumps will not be liable for damage or injury of any kind whatsoever arising directly or indirectly from product defects.
- Aussie Pumps' liability under the terms of the company's guarantee or warranty is limited to any one of the following:
  - replacement of the product with a suitable equivalent;
  - repair of the product;
  - return of the product for refund of purchase price;
  - payment for the cost of having the product repaired;
  - supply of replacement services;
  - payment of the cost of having services supplied again.

Aussie Pumps reserves the right to choose the lowest cost option of the above.

IMPORTANT

Complete and mail back warranty card immediately, or apply online ….
https://aussiepumps.com.au/warranty-registration/

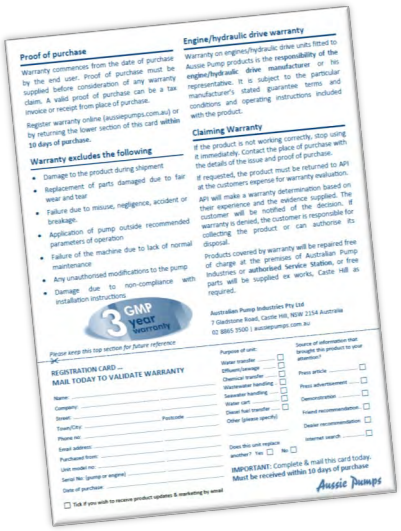

Proof of purchase

Warranty commences from the date of purchase by the end user. Proof of purchase must be supplied before consideration of any warranty claim. A valid proof of purchase can be a tax invoice or receipt from place of purchase.

Register warranty online (aussiepumps.com.au) or by returning the lower section of this card **within 10 days of purchase.**

Warranty excludes the following

- Damage to the product during shipment
- Replacement of parts damaged due to fair wear and tear
- Failure due to misuse, negligence, accident or breakage.
- Application of pump outside recommended parameters of operation
- Failure of the machine due to lack of normal maintenance
- Any unauthorised modifications to the pump
- Damage due to non-compliance with installation instructions

3 GMP year warranty

Engine/hydraulic drive warranty

Warranty on engines/hydraulic drive units fitted to Aussie Pump products is the **responsibility of the engine/hydraulic drive manufacturer** or his representative. It is subject to the particular manufacturer's stated guarantee terms and conditions and operating instructions included with the product.

Claiming Warranty

If the product is not working correctly, stop using it immediately. Contact the place of purchase with the details of the issue and proof of purchase.

If requested, the product must be returned to API at the customers expense for warranty evaluation.

API will make a warranty determination based on their experience and the evidence supplied. The customer will be notified of the decision. If warranty is denied, the customer is responsible for collecting the product or can authorise its disposal.

Products covered by warranty will be repaired free of charge at the premises of Australian Pump Industries or **authorised Service Station**, or free parts will be supplied ex works, Castle Hill as required.

Australian Pump Industries Pty Ltd
7 Gladstone Road, Castle Hill, NSW 2154 Australia
02 8865 3500 | aussiepumps.com.au

Please keep this top section for future reference

REGISTRATION CARD ...
MAIL TODAY TO VALIDATE WARRANTY

Name:
Company:
Street: Postcode
Town/City:
Phone no:
Email address:
Purchased from:
Unit model no:
Serial No: (pump or engine)
Date of purchase:
☐ Tick if you wish to receive product updates & marketing by email

Purpose of unit:
Water transfer
Effluent/sewage
Chemical transfer
Wastewater handling
Seawater handling
Water cart
Diesel fuel transfer
Other (please specify)

Does this unit replace another? Yes ☐ No ☐

Source of information that brought this product to your attention?
Press article
Press advertisement
Demonstration
Friend recommendation
Dealer recommendation
Internet search

IMPORTANT: Complete & mail this card today. Must be received within 10 days of purchase

Aussie Pumps

Australian Pump Industries Pty Ltd
8 Solent Circuit, Norwest NSW 2153
Ph: (02) 8865 3500
aussiepumps.com.au info@aussiepumps.com.au

Aussie Pumps

Certified System
Quality
ISO 9001
SAI GLOBAL